Chapter 10

Design of Prestressed Concrete Structures

© Dr. Eng. Wael Hassan
All rights reserved.
Academic use OK.
Commercial design use OK.
Commercial educational use prohibited.

© Copyrights

By

Dr. Eng. Wael Hassan

PRESTRESSED CONCRETE

بسم الله الرحمن الرحيم

PRESTRESSED CONCRETE.

Concept.

Concrete can resist high compressive stresses and very low tensile stresses, so artificial external compression is applied on concrete to counteract tesile stresses caused by loads.

Advantages of Prestressed Concrete.

1- Concrete Section is free of cracks.

2- Section is fully utilized so :

3- less Concrete dimensions, less o.w., So: (Save 20% - 50%)

4- Allows larger loads & Longer spans.

5- Less deflection (Improvement in serviceability conditions),

6- Cracks disappear if overloading is released.

7- Saving in transport & erection cost for Pre-Cast elements

Idea of Prestressing

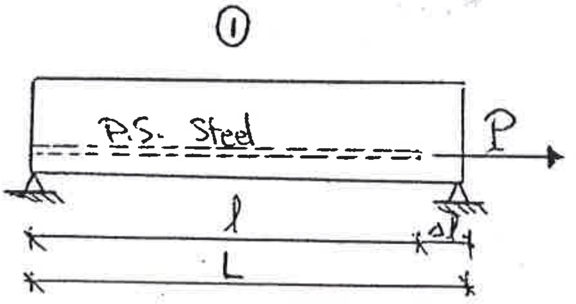

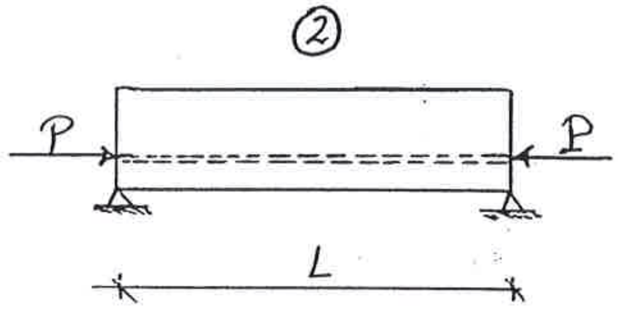

Prestressing Steel is tensioned by Force "P" & Stretched Δl

Prestressing Steel is trying to return to its original Length "l" [Since it is still in elastic zone], this causes compressive force "P" acts on Concrete.

Prestressing from Stress Point of View

i- Compressive force is acting at C.G. of section

f_t : Resistance of Conc. in Tension

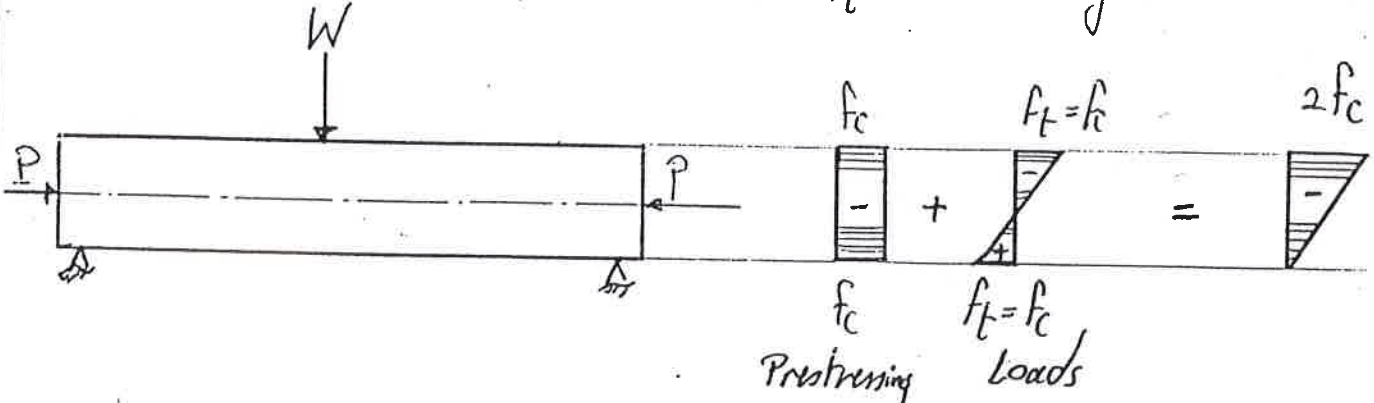

No cracks - non Uniform Compressive stress

ii- Compressive force is acting at eccentricity "e" from C.G.

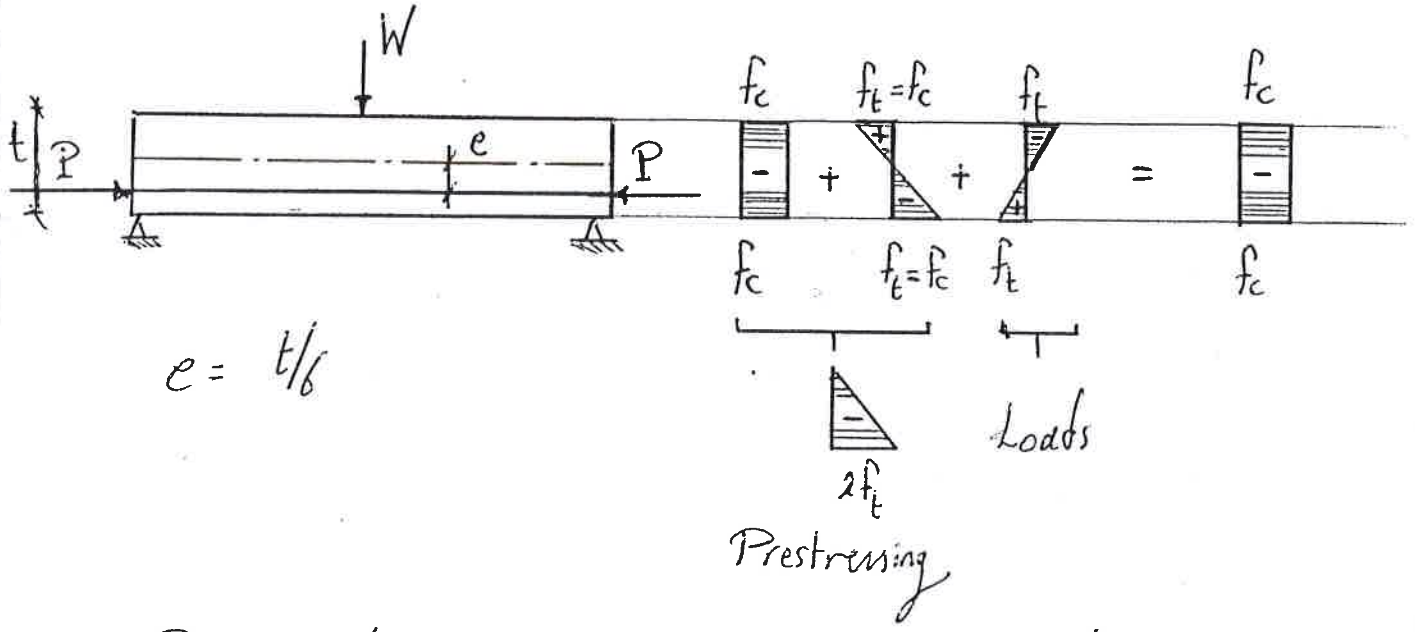

$e = t/6$

No cracks - Uniform compressive stress

iii- Compressive force acts at "e" & the Load is doubled

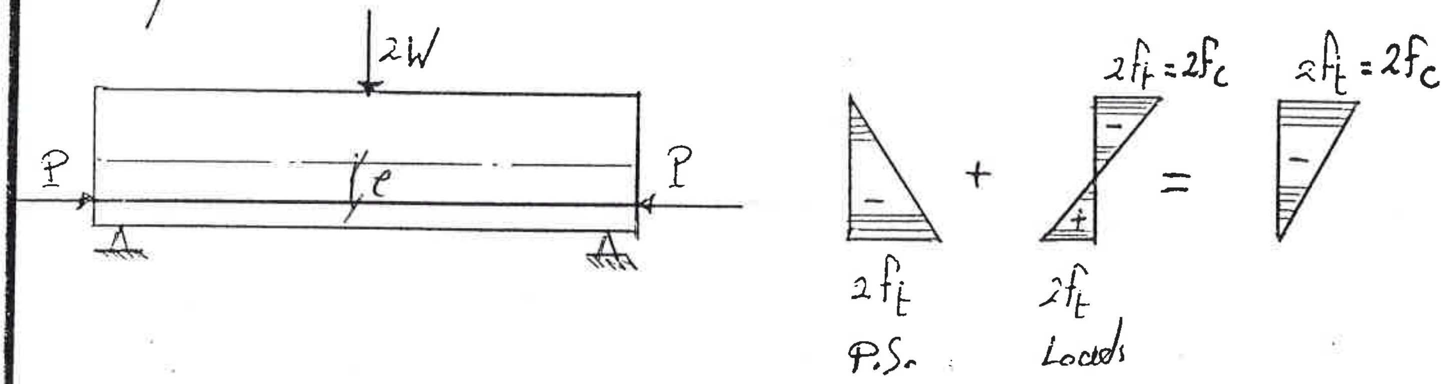

No cracks - Non uniform compressive stress

& the load is doubled.

• Cable Profiles in P/S Beams •

• Prestressing from Moment (Load) Balancing Point of View •

This concept regards prestressing as an attempt to balance Loads & moments acting on a member

i- Simple Beam

(1) Concentrated Load

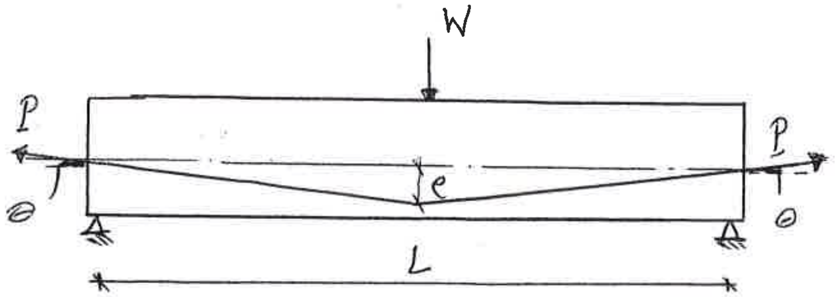

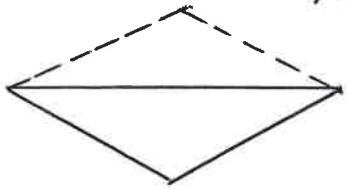

Moment Balancing

$\frac{WL}{4} = P.e \qquad \therefore P = \frac{WL}{4e} \quad \text{or} \quad e = \frac{WL}{4P}$

Load Balancing

$\frac{W}{2} = P \sin\theta$

$\simeq P \tan\theta$

$\therefore \frac{W}{2} = P \cdot \frac{e}{(L/2)}$

$\therefore P = \frac{WL}{4e}$

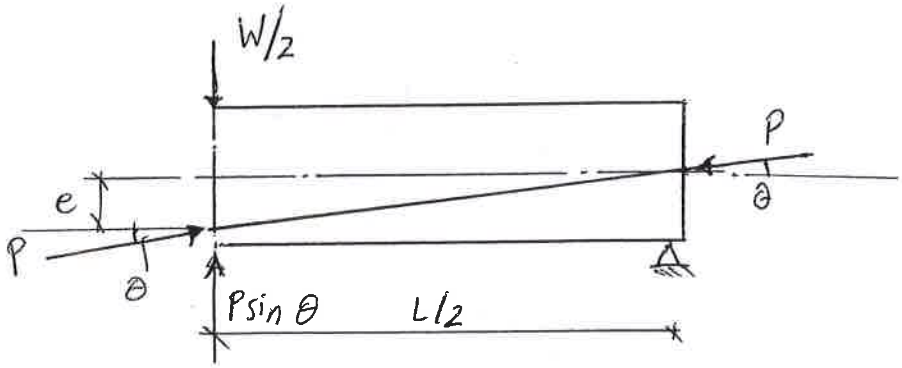

$\tan\theta = \frac{e}{(L/2)}$

(2) Uniformly Distributed Load

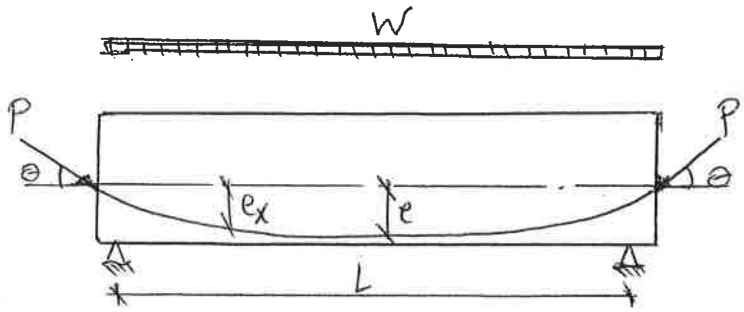

$$\tan\theta = \frac{2e}{L/2} = \frac{4e}{L}$$

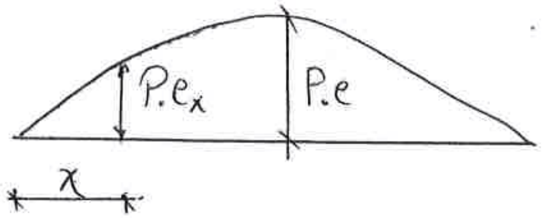

Moment Due to Prestressing

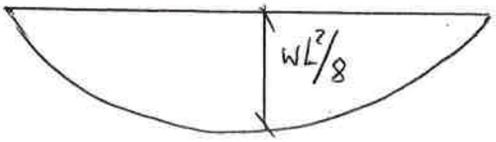

Moment Due to Load

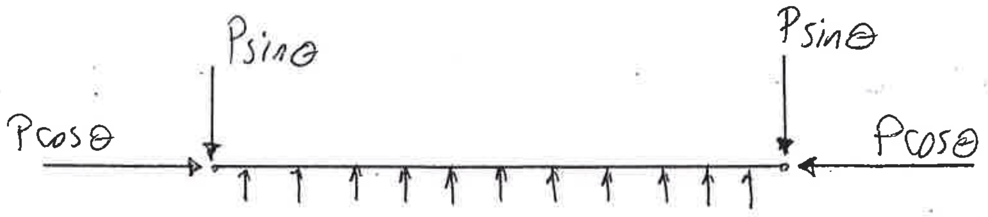

$$W' = 8\,\frac{P.e}{L^2} \quad \text{(equivalent Load)}$$

Moment Balance

$$M = \frac{WL^2}{8} = P.e$$

$$\therefore W = \frac{8\,P.e}{L^2}$$

ii- Cantilever Beam

(1) Concentrated Load

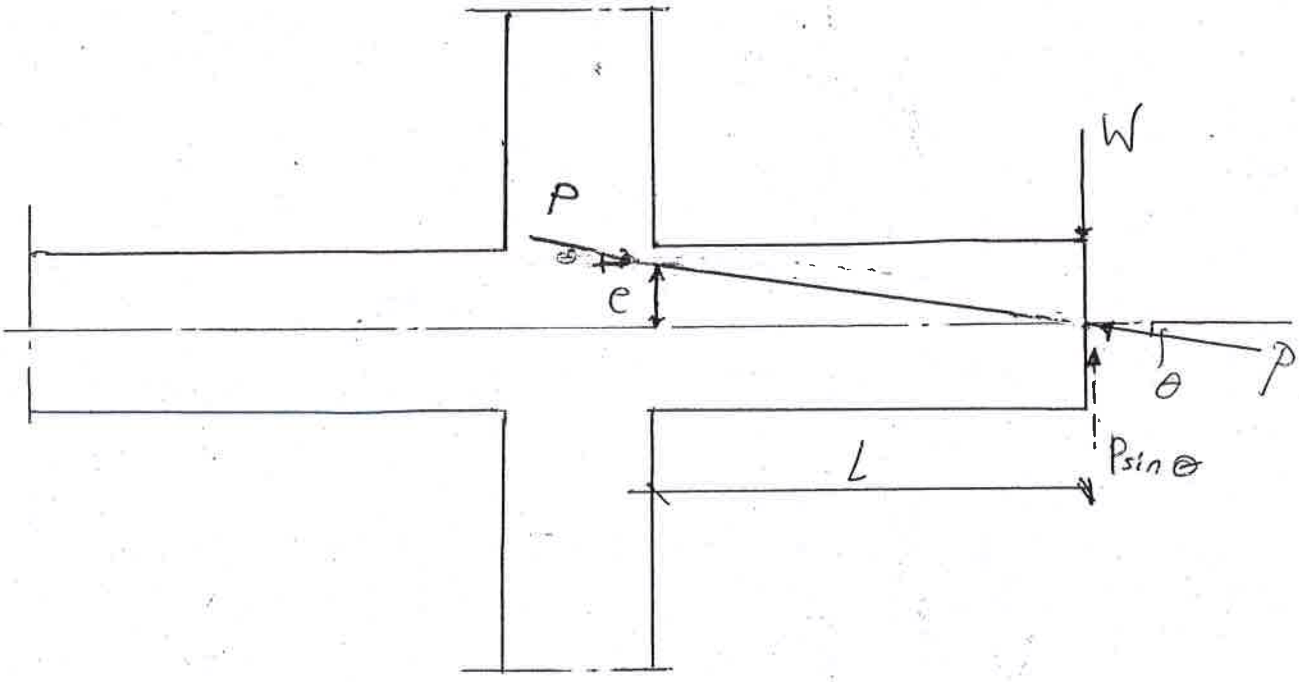

Moment Balancing

$$WL = P.e \qquad \therefore P = \frac{WL}{e}$$

Load Balancing

$$W = P\sin\theta \simeq P\tan\theta = P.\frac{e}{L}$$

$$\therefore P = \frac{WL}{e}$$

2 Distributed Load

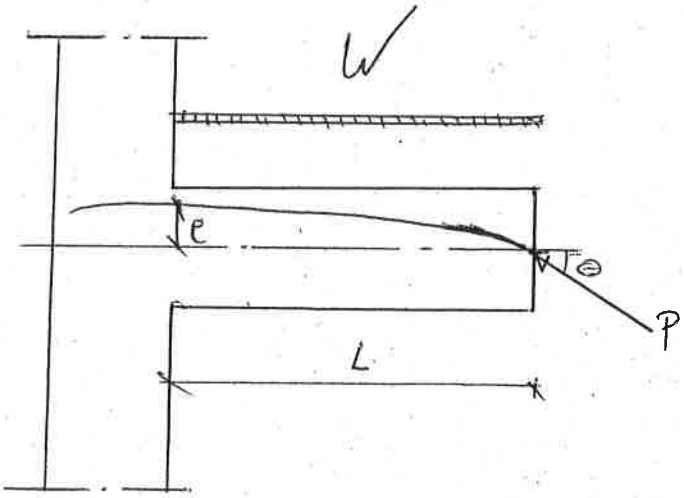

Moment Balancing

$$\frac{WL^2}{2} = P \cdot e$$

iii - Continuous Beams

1- Continuous cable (one cable for all moments)

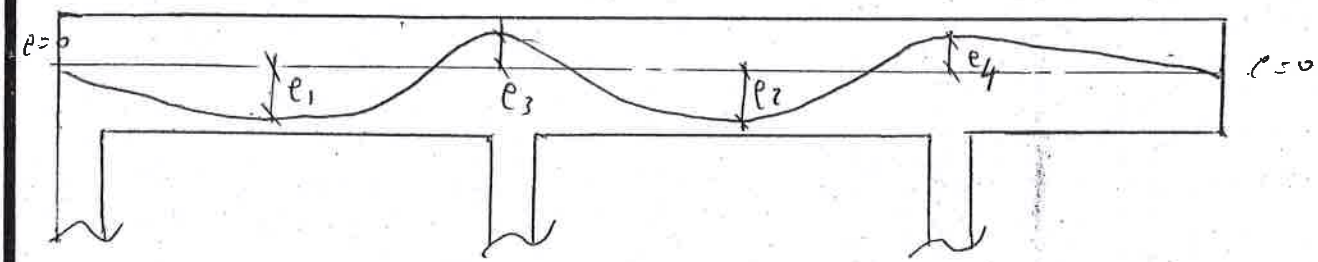

2- Discrete cables (Cable for each Moment)

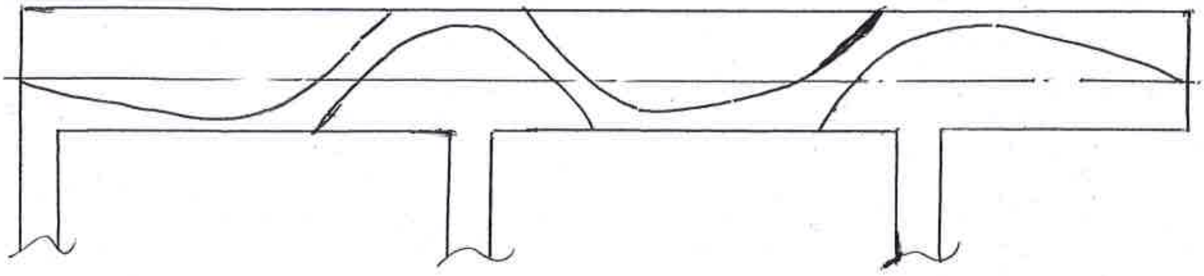

IV Tie member

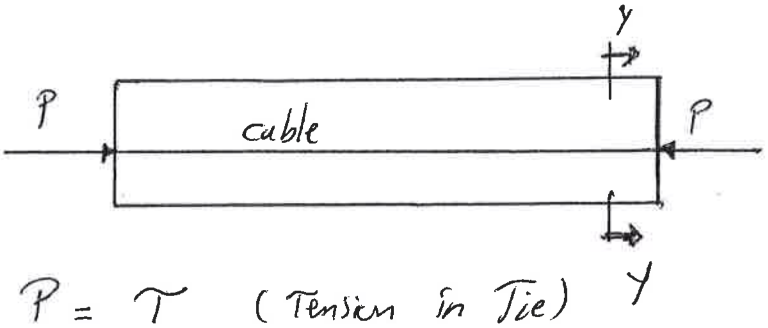

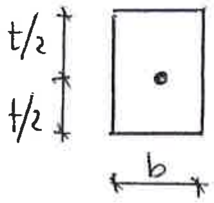

P = T (Tension in Tie)

sec y_y

V. Circular Tank or Pressure Tube [circular Prestressing].

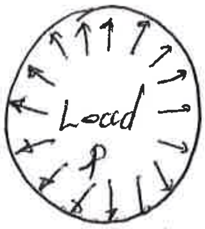

Water Pressure
(Load) p

+

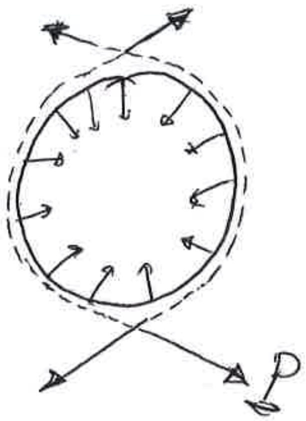

P = p * Diameter t/m'

P inward + P outward = Zero

• Methods of Prestressing •

1- Pre-Tensioning (Bonded - unanchored)

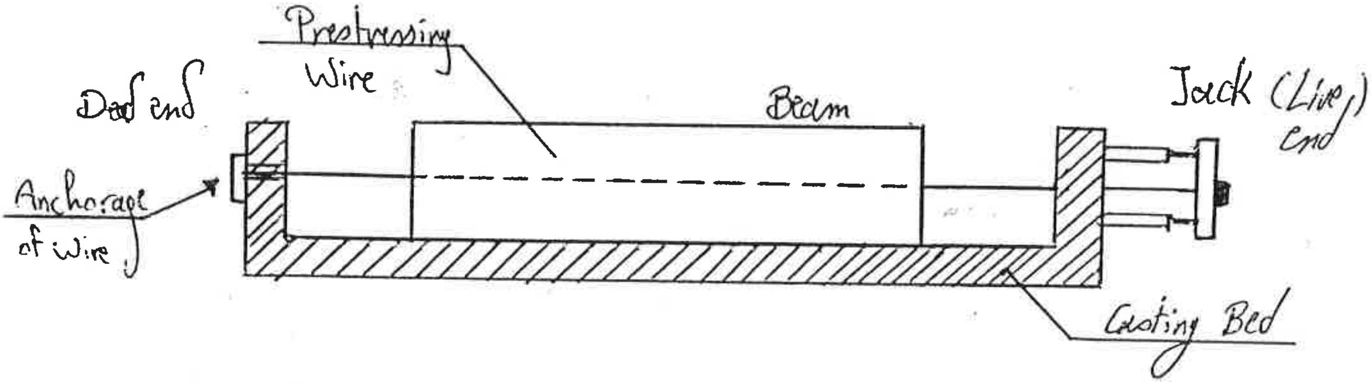

• Steps •

1- Tendons are tensioned

2- Concrete is placed & allowed to gain strength (hardened & cured for 28 days).

3- Tendons are released to give compressive force

4- Suitable for straight or broken tendons only

5- More suitable for precast elements

6- Prestressing force is trasferred to cocrete by bond.

7- NO special permenant anchorage is needed.

2- Post-Tensioning (Anchored unbonded)

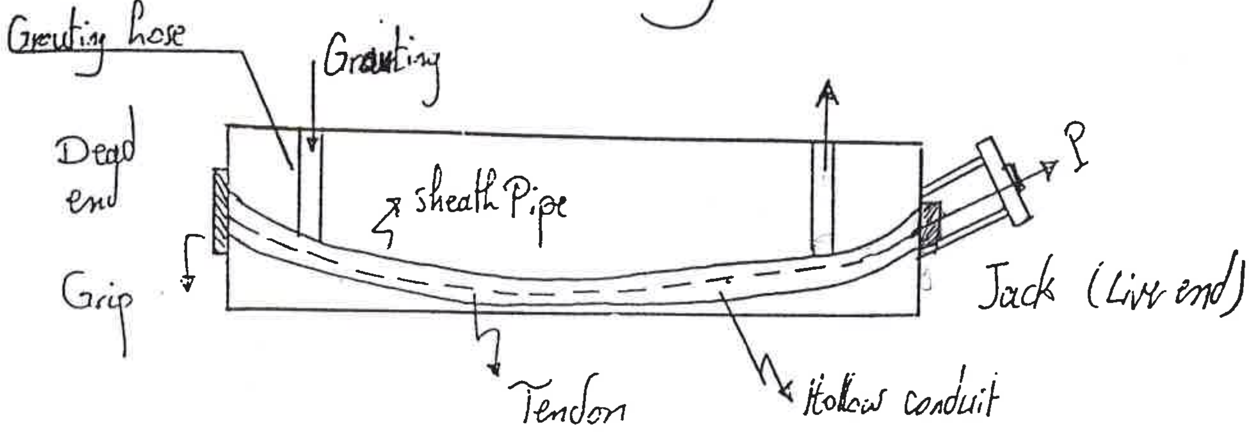

Steps:

1- Concrete is placed with ducts in position

2- Concrete is hardened, cured, allowed to gain strength.

3- Tendon is inserted & tensioned

4- Tendon end is Gripped (تثبيت الأواح)

5- Tension is released

6- Grout is placed into hose to give bond betn conc & steel

7- P/s force is transferred to Concrete by end bearing through Parmenant anchorage at beam ends

8- Post-Tensioning gives more flexibality in choosing Cable Profile.....

• Materials of Prestressed Concrete.

1_ Concrete

use higher strength concrete than ordinary R.C to carry high compressive force & to give strong bond with cables, & to avoid reduction in P/s force

use $f_{cu} \nless 300\ kg/cm^2$ ($30\ N/mm^2$) Post-Tension

($1\ N/mm^2 = 10\ kg/cm^2$)

$f_{cu} \nless 400\ kg/cm^2$ Pre-Tension

2- Steel

ⓐ Strands (Common for Pretension)

7 wire strand

$f_{y_p} = 14000\ kg/cm^2$ $f_{pu} = 17000\ kg/cm^2$

ⓑ Wires (common for post-Tension)

$f_{y_p} = 14000\ kg/cm^2$ $f_{pu} = 17000\ kg/cm^2$

ⓒ Alloy steel bars

$f_{pu} = 10000 - 11000\ kg/cm^2$

Stresses in Prestressed Concrete.

Prestressed section is considered uncracked $I = I_g$

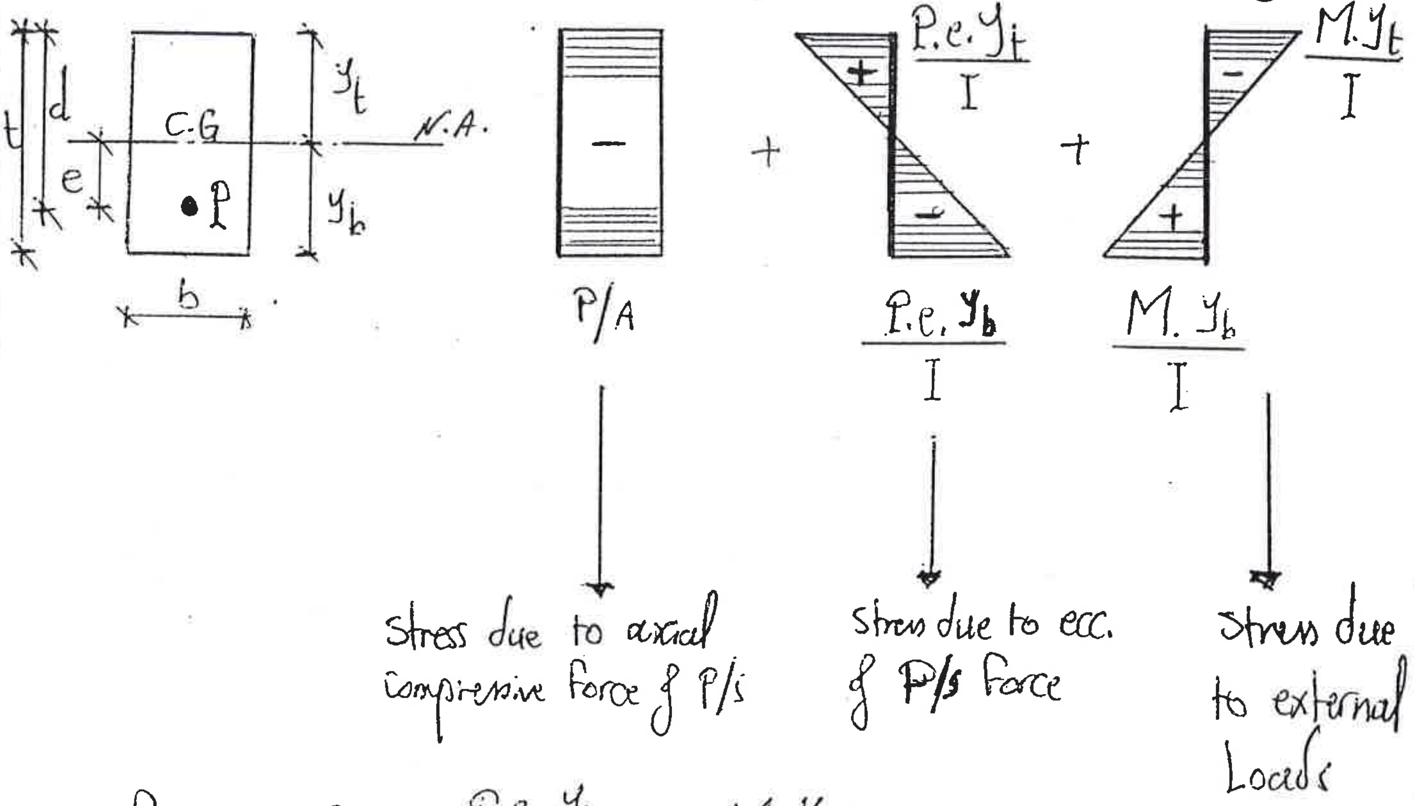

$$\therefore \; f_t = -\frac{P}{A} + \frac{P.e.y_t}{I} - \frac{M.y_t}{I}$$

$$\& \; f_b = -\frac{P}{A} - \frac{P.e.y_b}{I} + \frac{M.y_b}{I}$$

$A = b * t$ area of concrete section. $I : I_g$; gross M.O.I

$y_t = y_b = t/2$ [In Rectangular Sections]

e : eccentricity of P.S. Force $= (y_b - 10\text{ cm})$ if not given

M : moment due to working loads

* for simplicity use $Z = \frac{I}{y}$ cm^3 (Sec Modulus)

$\therefore f_t = -P/A + \frac{P.e}{Z_t} - \frac{M}{Z_t}$ $\qquad Z_t = \frac{I}{y_t}$

& $f_b = -P/A - P.e/Z_b - M/Z_b$ $\qquad Z_b = \frac{I}{y_b}$

* for Rec. sec. $Z_t = Z_b = \frac{bt^2}{6}$

* for T-sec $y_b \neq y_t$ $\quad \therefore Z_t = \frac{I}{y_t}$, $Z_b = \frac{I}{y_b}$

$y_t = \bar{y}$

$y_b = t - \bar{y}$

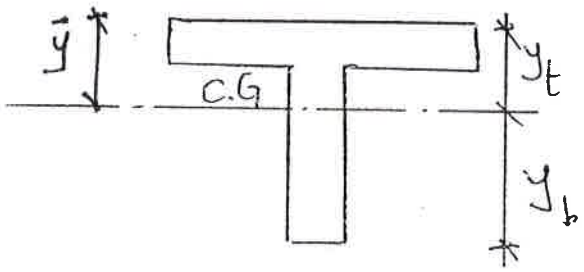

• Loading Stages for Prestressed Concrete •

1- Case of Transfere (Initial Prestressing Stage)

Only applied Load is own weight of concrete in addition to initial Prestressing force. (P_i)

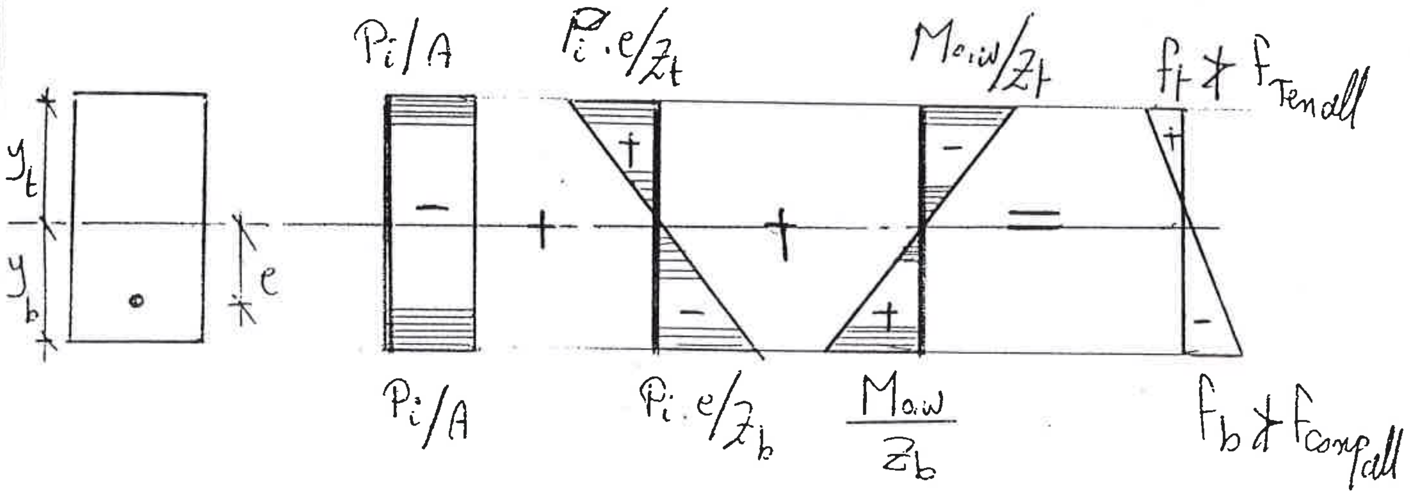

$$f_t = -\frac{P_i}{A} + \frac{P_i.e}{Z_t} - \frac{M_{o.w.}}{Z_t} \not> f_{Ten.all.}$$

$$f_b = -\frac{P_i}{A} - \frac{P_i.e}{Z_b} + \frac{M_{o.w}}{Z_b} \not> f_{comp.all.}$$

* If "P_i" is required take smaller value from both equations
* If "P_i" = −ve take the other one.

b- Case of Full Service loads (final Stage)

* Applying loads are Full service (working) Loads
* Applying P/s force is final Prestressing force "P_f"

$P_f = P_i -$ Losses   Losses = 10-15% if not given

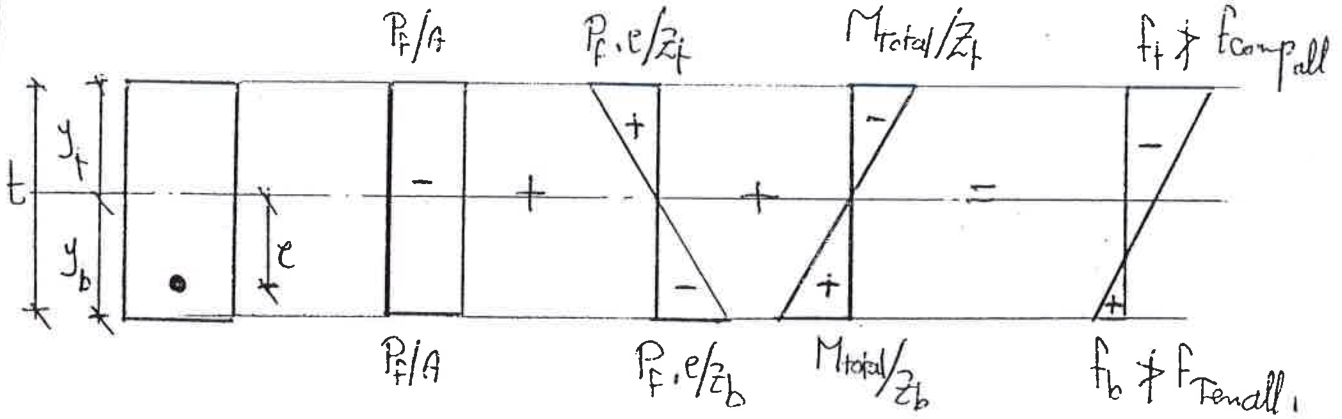

$$f_t = -\frac{P_f}{A} + \frac{P_f.e}{Z_t} - \frac{M_{Total}}{Z_t} \not> f_{Comp_{all}}$$

$$f_b = -P_f/A - \frac{P_f.e}{Z_b} + \frac{M_{Total}}{Z_b} \not> f_{Ten.all} \quad (\text{or } f_{Comp_{all}})$$

If "P_f" is required: take the larger value from both equations

C- Case of Ultimate limit State

check Ultimate Capacity of sec.

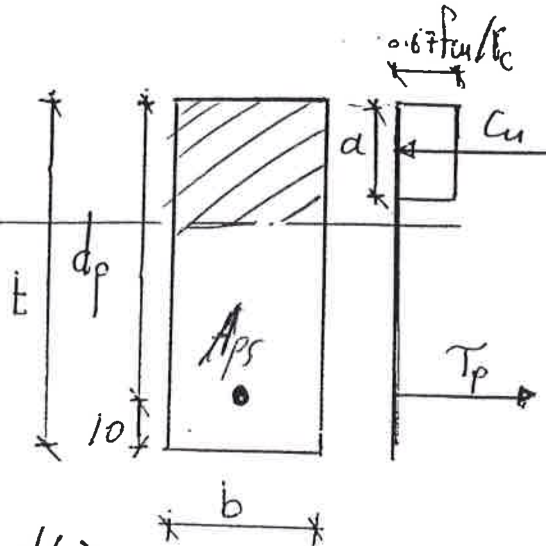

$C_u = T_p$

$\therefore 0.67 \frac{f_{cu}}{\gamma_c} \cdot a \cdot b = \frac{A_{ps} * f_{py}}{\gamma_{ps}}$ (γ_c = 1.5, γ_{ps} = 1.15)

Get a (if $a > d/2$ take $a = d/2$)

$M_{ur} = C_u \, y_{ct} = C_u * (d_p - a/2) = 0.67 \frac{f_{cu}}{\gamma_c} \cdot a \cdot b (d_p - a/2)$

$M_u = 1.5 M_{Total}$ • If :
* $M_{ur} \geq M_u$ ∴ safe
* $M_{ur} < M_u$ ∴ unsafe & use Ordinary RFT

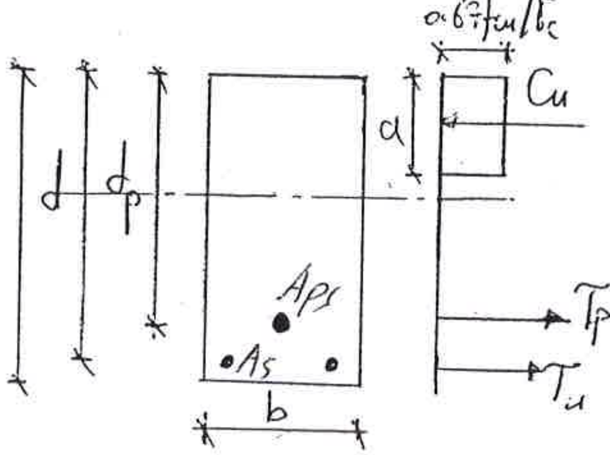

$\therefore C_u = T_p + T_u$

$0.67 \, f_{cu}/\gamma_c \cdot b \cdot a = \frac{A_{ps} f_{py}}{\gamma_{ps}} + \frac{A_s f_y}{\gamma_s}$ (f_y = 3600, γ_s = 1.15)

Get $a = f(A_s)$

subs. in M_u from Part ①

$\therefore M_{ult} = T_u \, y_{st_1} + T_p \, y_{st_2}$

$= \frac{A_s f_y}{\gamma_s} (d - a/2) + \frac{A_{ps} \cdot f_{py}}{\gamma_{ps}} (d_p - a/2)$ (II)

$d_p = t - 10$

$d = t - 5$

Get a, A_s

Allowable Stresses In Prestressed Concrete

- **Concrete:**

  -At Transfer:

  $f_{comp} \leq 0.45\, f_{cui}$ N/mm²

  $f_{ten} \leq 0.22 \sqrt{f_{cui}}$ N/mm²

  for straight cable → f_{ten} (At End Of Beam) $\leq 0.44 \sqrt{f_{cui}}$

  -At Full Load: $f_{comp} \leq 0.35\, f_{cu}$ Dead Loads & P.S. force

  $f_{comp} \leq 0.40\, f_{cu}$ N/mm² full Load

  $f_{ten} \leq 0.44 \sqrt{f_{cu}}$ N/mm² full Load

- **Steel:**

  -At Transfer:

  $f_{s\,all}$ = Smaller of [$\leq 0.90 f_{py}$ & $\leq 0.75 f_{pu}$

  -At Full Load:

  $f_{s\,all}$ = smaller of [$\leq 0.80 f_{py}$ & $\leq 0.70 f_{pu}$

- $T = A_{sp}\, f_{py} / \gamma_s$
- $M_u = A_{sp} (f_{py} / \gamma_s)(d - a/2)$ $\quad a \ngtr d/2$

* Deflection of Prestressed Concrete (Due to Prestressing force) (camber)

* Straight Cable Profile

$$\Delta = -\frac{P.e.L^2}{8EI_g} \uparrow$$

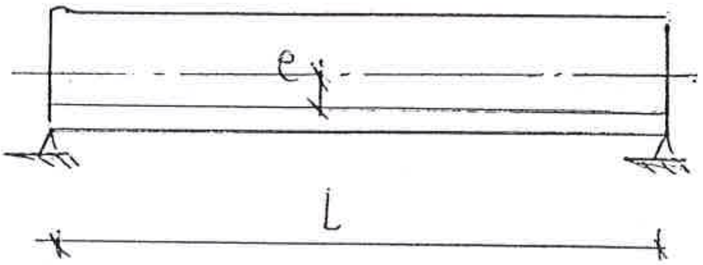

* Broken Cable Profile

$$\Delta = -\frac{P.e.L^2}{24EI_g} \uparrow$$

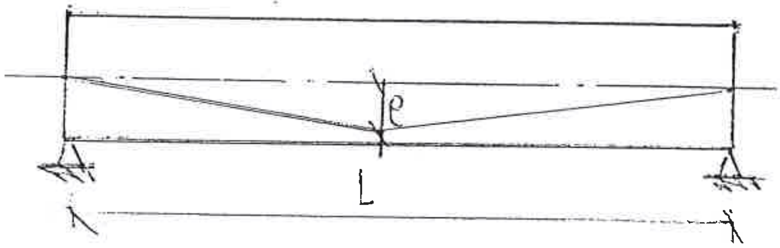

* Curved (Parabolic) Cable Profile

$$\Delta = -\frac{5\,P.e.L^2}{48EI_g} \uparrow$$

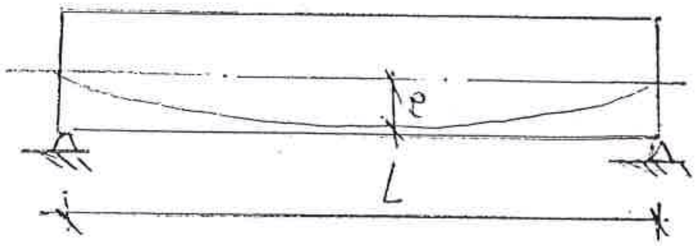

Deflection due to external loads: Refer to serviceability L.S.

$$\Delta_{uniform\ Load} = \frac{5\,w\,L^4}{384\,EI_g} \downarrow$$

Prestressed Concrete

* Jacking Force P_J

P_J —Losses 5% (Imm. losses)→ P_i —Losses (10–15%) (Time-dep. losses)→ P_f

Jacking force — Initial P/s force — final P/s force

$P_f = 0.85\ P_i$ $\qquad$ $P_i = 0.95\ P_J$

* Unit Convertion :-

0.5 fcu – 0.70 fcu

Transfer: * $f_{comp\,all} = 0.45\ f_{cu_i}$ = —— kg/cm²

↳ kg/cm²

* $f_{Ten\,all} = 0.22\sqrt{f_{cu_i}}$ = —— N/mm²

↘ N/mm²

= —— * 10 kg/cm²

1 N/mm² = 10 kg/cm²

fcu = 250 ⟶ fcu = 25

* Full servic Load

$$f_{comp\,all} = 0.4\, f_{cu} = \text{——}\ kg/cm^2$$

(f_{cu} → kg/cm^2)

$$f_{Ten\,all} = 0.44 \sqrt{f_{cu}} = \text{——}\ N/mm^2$$

(f_{cu} → N/mm^2)

* **To Get Aps** (Very Impoltant)

from transfere stage :-

$$f_{s\,all} = \text{smaller of} \begin{cases} 0.9\, f_{py} \rightarrow 14000 \\ 0.75\, f_{pu} \rightarrow 17000 \end{cases}$$

$$f_{s\,all} = \frac{P_i}{A_{ps}} \quad \text{get } A_{ps}$$

* Eccentricity of P/S steel

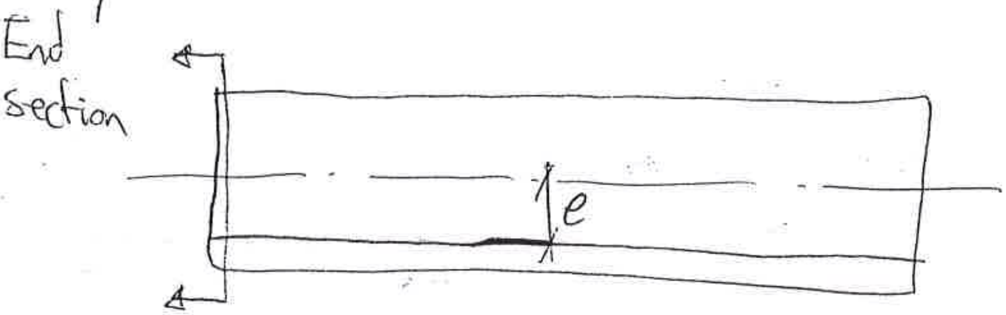

Straight Cable بيقصد إنه الابتعاد عن ال

Zero = Mow لأنه تساوي الـ End section الـ

$f_b > f_{comp\,all}$ نعكس

End section عند ال e = صفر دائما نحاول أن تكون

(Broken or Parabolic Cable)

Prestressed Concrete

Principle Tension

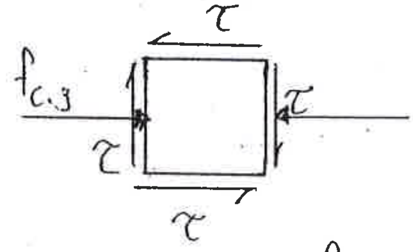

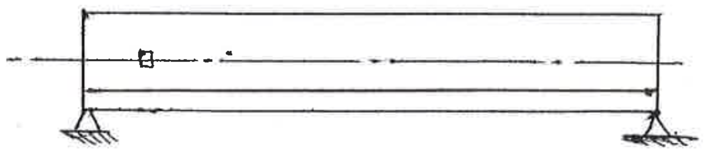

$f_{c.g}$ is compressive stress at C.g.

$$\tau = \frac{Q \cdot S_{c.g}}{I\, b}$$

$$f_{1,2} = -\frac{f}{2} \pm \sqrt{(f/2)^2 + \tau^2}$$

$$\tan 2\alpha = 2\tau / f$$

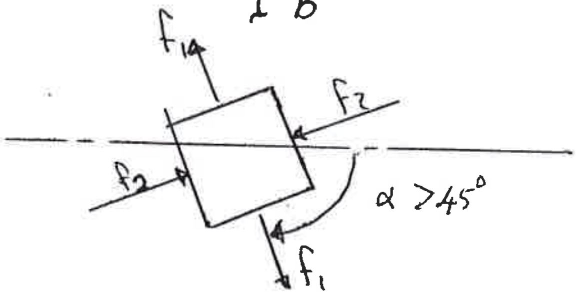

Note : for Rectangular section $\tau = \frac{3}{2}\frac{Q}{A}$

τ : shear stress kg/cm^2

Q : Shear force kg $= \frac{wl}{2}$ or $\left\{ Q_{net} = \frac{wl}{2} - P\sin\theta \right.$ (في حالة cable unstraight)

A: area of x-section , b: breadth of section at C.G.

$S_{c.g}$: 1st moment of area @ C.G : cm^3

b : width of sec at C.G.

$$f = +\frac{N}{A_c}$$

N : P_f in case of straight cable

N : $P_f \cos\theta$ in case of non-straight

Example

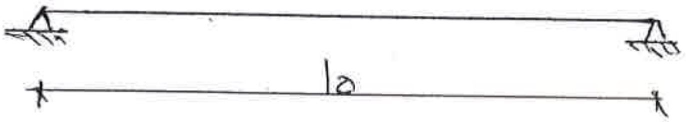

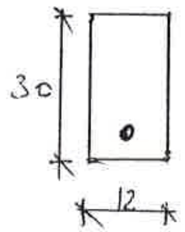

$P = 18$ ton $\quad w = 0.5\ t/m'$ (including o.w.)

$A = 12 * 30 = 360\ cm^2$

$I = 12 * (30)^3/12 = 27000\ cm^4$ $\quad$ Straight Cable

$Q = wl/2 = 0.5 * 10/2 = 2.5$ ton

$\tau = 3/2\ Q/A = 3/2 * (2.5 * 10^3/360) = 10.5\ kg/cm^2$

$f = +P/A = +18000/360 = 50\ kg/cm^2$

$f_{1,2} = -50/2 \pm \sqrt{(25)^2 + (10.5)^2} =$

$= -25 \pm 27.2 = -52.2\ kg/cm^2$

$+2.2\ kg/cm^2$

$\tan 2\alpha = 2\tau/f = 2 * 10.5/50 = 0.42$

$\therefore \alpha = \dfrac{\tan^{-1} 2\alpha}{2}$

Losses of Prestressing Force

Type	Source	Pretension	Post Tension
Immediate Losses (Short Term)	• Anchorage slip	✗	✓
	• Elastic Shortening	✓	✗ (one-Cable)
	• Friction	✗	✓
Long Term losses	• Shrinkage	✓	✓
	• Creep	✓	✓
	• Relaxation of steel	✓	✓

3- Losses due to friction (Wabble loss , Curvature loss)

يوجد نوعان من الـ Friction losses ، أحدهما ناتج عن عدم استواء الماسورة

وهو يعتمد على نوع الماسورة (Wabble losses "K"

والنوع الآخر ناتج من احتكاك الـ Cable بسقف الماسورة وهنا يعتمد

على نصف قطر انحناء الماسورة . (Curvature loss)

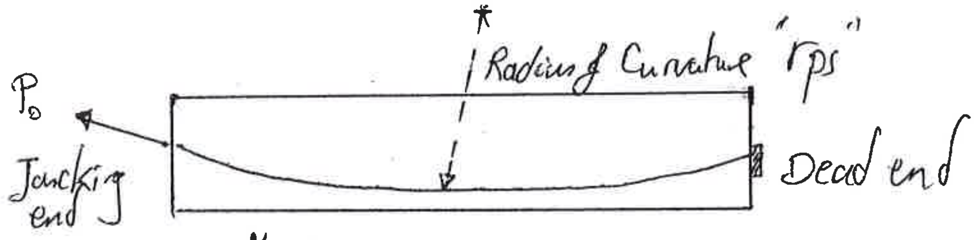

$$P_x = P_o \, e^{\left(-\frac{\mu x}{r_{ps}}\right)} \qquad e = 2.71$$

$$P_x = P_o \left(1 - \frac{\mu x}{r_{ps}}\right) \qquad \text{if} \quad \frac{\mu x}{r_{ps}} \leq 0.20$$

P_o : initial Prestressing force at Jacking end.

P_x : Prestressing force at distance x from Jacking End.

μ : coeff. of friction bet^n tendon & duct $\simeq 0.3$ (steel, steel)

r_{ps} : radius of curvature of duct

4- Losses due to shrinkage :-

$\Delta f = \epsilon_{sh} \; E_p$

$\epsilon_{sh} = 0.3 * 10^{-3}$ Pre-Tensioning

$\epsilon_{sh} = 0.2 * 10^{-3}$ Post-Tensioning

E_p = modulus of Elasticity of P/s steel = $2.1 * 10^6$ kg/cm²

*Example 2 : same data of example 1

Pretension system

Loss due to shrinkage $\Delta f = 0.3 * 10^{-3} * 2.1 * 10^6 = 630$ kg/cm²

∴ loss is about 8%

5- Losses due to creep

$\varepsilon_{cr} = \phi\, \varepsilon_e$

$\phi = 2$ Pre-tension

$\phi = 1.6$ Post-Tension

ε_e : elastic strain.

∴ Losses due to creep (stress) $= \varepsilon_{cr} * E_s$

$= \phi\, \varepsilon_e \cdot E_s$

$= \phi\, \varepsilon_c\, E_s$

$= \phi \left(\frac{f_c}{E_c}\right) E_s$

∴ Losses of creep $= \phi\, f_c\, n$

$n = \frac{E_s}{E_c}$

$E_s = 2.1 * 10^6$ kg/cm²

$E_c = 14000\sqrt{f_{cu}}$ kg/cm² (f_{cu} in kg/cm²)

f_c : stress in conc. at tendon Level

$\varepsilon_{cr}^{*} = \varepsilon_{cr} * \alpha$ curve (10-5) P. 10-26

* Example:

A beam is Prestressed by 5 wires each of diameter 0.7 mm

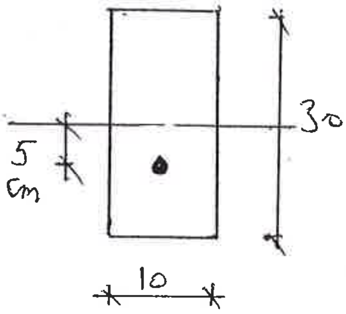

"Solution"

$f_{s\,all} = 12000\ kg/cm^2$

$\phi = 1.5$ (assumed)

$E_C = 350\ t/cm^2$

$n = 6$

$A_{ps} = \pi (0.7)^2/4 = 0.385\ cm^2$ (one wire)

$P_i = 5 * 0.385 * 12000 = 23.1\ ton$

$f_c = -(23.1 * 10^3/300) - (23.1 * 10^3 * 5 * 5)/22500 = -77 - 25.6$

$-P_i/A - P_i.e.e/I$

$= 102.6\ kg/cm^2$

∴ Losses due to creep $= 1.5 * 102.6 * 6 = 925\ kg/cm^2$

∴ Losses $\simeq 7.7\ \%$

6- Losses of Steel Relaxation : Refer to Manufacturer

© Eng. Wael Hassan
All rights reserved.
Academic use OK.
Commercial design use OK.
Commercial educational use prohibited.

• بسم الله الرحمن الرحيم •

Losses in Prestressed Concrete

• Types of Losses •

i- Immediate Losses

1- Elastic Shortening losses.

2- Pull-in losses (Draw-in losses)

3- Element Restraint losses.

4- Friction Losses:-

a- Jack Internal losses.

b- Wobble effect Losses (Unintensional variations).

c- Duct Curvature losses.

ii- Long Term losses (Time-dependent Losses)

1- Shrinkage losses.

2- Creep Losses.

3- Steel Relaxation Losses

• Losses in Pre-Tension & Post-Tension System.

Type	Losses	Pre-Tension	Post-Tension
Immediate	Elastic shortening	✓	✗
Immediate	Pull-in losses	✓	✓
Immediate	Element restraint	✓	✓
Immediate	Jack internal friction	✓	✓
Immediate	Wobble effect	✗	✓
Immediate	Duct Curvature	✗	✓
Long-Term	Shrinkage losses	✓	✓
Long-Term	Creep losses.	✓	✓
Long-Term	Relaxation of steel	✓	✓

i- Immediate Losses

1- Elastic Shortening Losses

هو الفقد الذى يحدث من قوة سبق الإجهاد نتيجة انضغاط الخرسانة تحت تأثير قوة سبق الإجهاد.

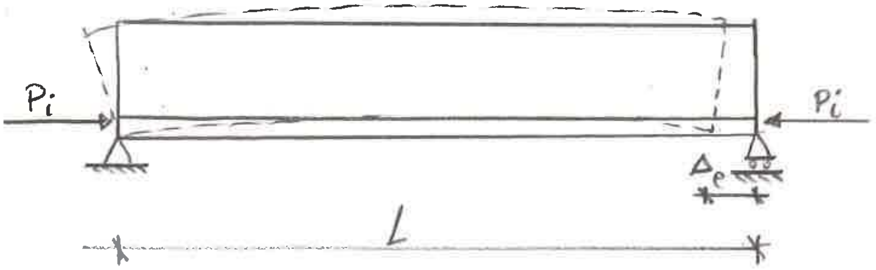

Due to compression of "P_i", there is shortening in beam "Δ_e"

$$\Delta_e = \frac{\text{stress at cable level}}{E_{ci}} * L = \frac{f_{pci}}{E_{ci}} * L$$

- $E_{ci} = 14000\sqrt{f_{cu_i}}$ kg/cm² or $E_{ci} = 4427\sqrt{f_{cu_i}}$ N/mm²
- Stress at Cable Level (concrete stress) $f_{pci} = \left[\frac{-P_i}{A_c} - \frac{P_i \cdot e^2}{I_g} \right]$
- Get ϵ_e : strain due to elastic shortening.

$$\epsilon_e = \frac{\Delta e}{L} = \frac{f_{pci}}{E_{ci}} = \frac{1}{E_{ci}} \left[-\frac{P_i}{A_c} - \frac{P_i \cdot e^2}{I_g} \right]$$

Notice that we've neglected o.w. in Calculations.

• Stress Lost due to Elastic Shortening. Δf_{pe}

$$\Delta f_{pe} = \epsilon_e \cdot E_p = \frac{E_p}{E_{ci}} \cdot f_{pci}$$ kg/cm²

• Force lost due to Elastic Shortening. ΔP_e

$$\Delta P_e = \Delta f_{pe} * A_p = \frac{E_p}{E_{ci}} \cdot f_{pci} \cdot A_p$$ kg

Note

In case of sequential prestressing : شد الكابلات على مراحل

$$\therefore \Delta f_{pe} = \frac{1}{2} \cdot \frac{E_p}{E_{ci}} \cdot f_{pci}$$

Ex. if you have 2-cables

Cable 1 $\Delta f_{pe} = \epsilon_e E_p$

Cable 2 $\Delta f_{pe} = \frac{1}{2} \epsilon_e E_p$

$$\therefore \Delta f_{pe\ average} = 0.75\, \epsilon_e E_p$$

if you have 3-cables

Cable 1 $\Delta f_{pe} = \epsilon_e E_p$

Cable 2 $\Delta f_{pe} = \frac{2}{3} E_p \cdot \epsilon_e$

Cable 3 $\Delta f_{pe} = \frac{1}{3} E_p \cdot \epsilon_e$

$$\therefore \Delta f_{pe\ average} = \frac{2}{3} \epsilon_e E_p$$

2- Pull-in Losses [Draw-in Losses]

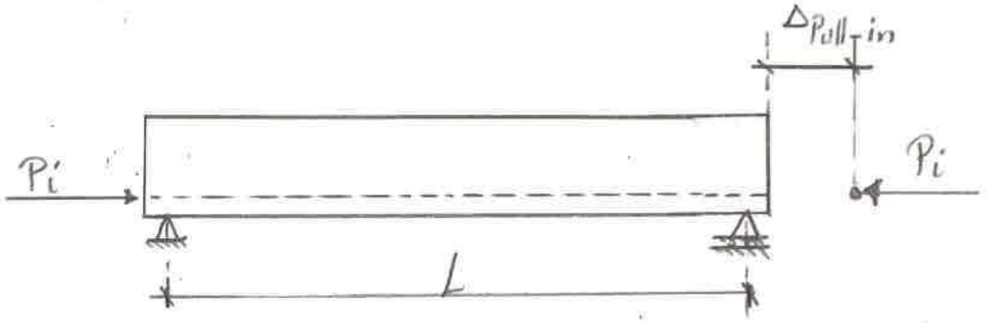

$\Delta_{Pull-in}$: slip pull-in deflection, given by manufacturer

if not given assume $\Delta_{Pull-in} = 3-6$ mm

$\epsilon_{Pull-in}$: Pull-in strain $\quad \epsilon_{Pull-in} = \dfrac{\Delta_{Pull-in}}{L}$

. Stress Lost due to Pull-in Losses.

$$\boxed{\Delta f_{pull-in} = \epsilon_{Pull-in} * E_p} \quad kg/cm^2$$

. Prestressing Force Lost due to Pull-in losses.

$$\boxed{\Delta P_{pull-in} = \Delta f_{pull-in} * A_p = \epsilon_{pull-in} \cdot E_p \cdot A_p} \quad kg$$

3- Element Restraint Losses.

It's a type of immediate loss occurs when Beam is not free to shorten since it is retrained by supports (Piers).

4- Friction Losses

a- Jack internal Losses

هو الفقد نتيجة الاحتكاك الداخلي في ماكينة الشد ويتناسب مع ضغط الـ Jack المستخدم ، وتعطى قيمته من الشركة المصنعة لماكينة الشد.

b- Wobble friction Losses [Unintensional Variation]

هو الفقد من قوة سبق الإجهاد نتيجة التغيرات غير المقصودة في مسارات ال Ducts ويعتمد على :-

1- Duct Type.
2- Internal Duct Surface Condition.
3- Method of forming
4- Degree of vibration during Casting.
5- Distance between supporting Elements of Duct (المسافات بين الكراسي)

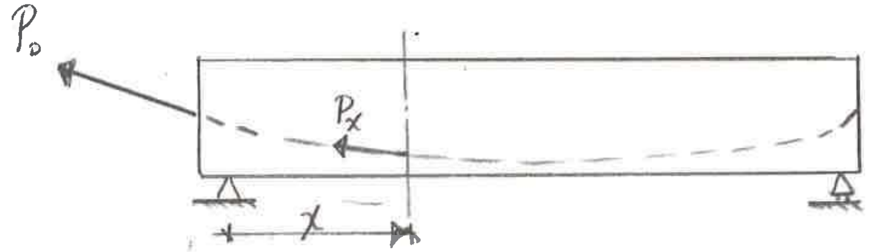

$$P_x = P_o \, e^{-kx}$$

kg

- P_o : Prestessing force at Jacking End قوة سبق الإجهاد عند طرف الشد
- X : المسافة من بداية طرف الشد وحتى النقطة المراد حساب الفقد عندها
  X : بالمتر (m)

* In Case of Jacking From one-End

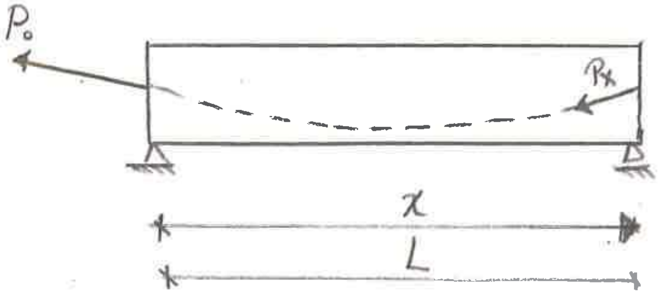

$x = L$ حيث نحسب x عند أقصى فقد للقوة

* In-Case of Jacking From both Ends

نظراً لأن الفقد في القوة يزيد كلما ابتعدنا عن طرف الشد ، فإن هذا يؤدي إلى اختلاف كبير في قيم الـ Prestressing force على طول الكابل ، ولتجنب هذا يتم شد الكابلات من الناحيتين (وخصوصاً في الكباري حيث البحور كبيرة جداً).

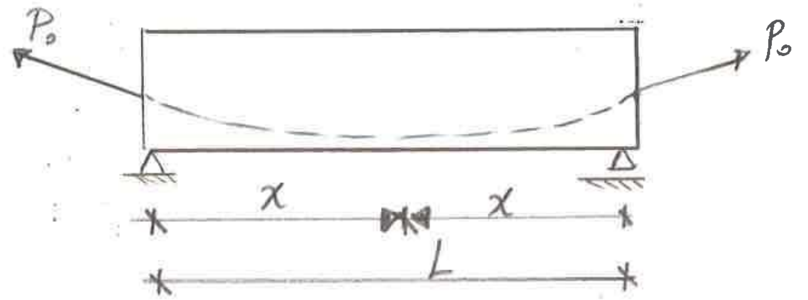

$x = L/2$ (Max. Lost distance for P/s force)

- P_x : Prestressing Tension force in cable at distance "x" from Jacking End

∴ ΔP_w : Loss in P/s force due to wobble effect

$$\therefore \Delta P_w = P_o - P_x \qquad kg$$

- K : Wobble factor / m of cable length
(coefficient)

K : 0.0033 /m in normal cases

K : 0.0017 /m for rigid duct, well supported.

C- Curvature Friction Losses

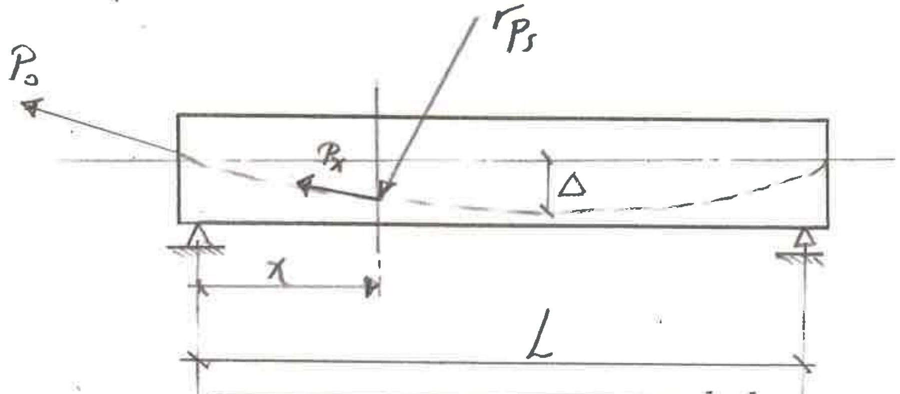

$$P_x = P_o \cdot e^{\left[\frac{-\mu \cdot x}{r_{ps}}\right]} \quad kg$$

يحدث فقد في قوة سبق الإجهاد نتيجة احتكاك الكابل بسقف الماسورة نتيجة التقوس

r_{ps} : radius of curvature of Duct at distance "x"

r_{ps} : meter.

$r_{ps} = \frac{1}{y''}$ مقلوب التفاضل الثاني لمعادلة المنحنى : r_{ps}

$$y = 4\Delta \left(\frac{x}{L}\right)^2$$

$$\bar{y} = \frac{4\Delta}{L^2} * 2x = \frac{8\Delta}{L^2} x$$

$$\bar{\bar{y}} = \frac{8\Delta}{L^2}$$

$$r_{ps} = \frac{1}{y''} = \frac{L^2}{8\Delta}$$

- μ : Coefficient of friction

$\mu = 0.55$ (Steel on hardened concrete)

✓✓ $\mu = 0.30$ (Steel on steel). ✓✓

$\mu = 0.25$ (Steel on lead)

- P_o : Force at Jacking End.
- P_x : Force in P/S Cables at distance x
- x : Distance from Jacking end to point considered

$x = L$ (Jacking from one end)

$x = L/2$ (Jacking from both ends)

x : meter

- ΔP : Force Lost by curvature friction

$$\Delta P_{cur.} = P_o - P_x \quad \text{kg.}$$

• Special Cases of Curvature friction Losses •

① if $\left[\frac{\mu \cdot x}{r_{ps}}\right] \leq 0.20$

$$\therefore \quad P_x = P_o\left[1 - \frac{\mu \cdot x}{r_{ps}}\right]$$

$$\Delta P_{cur.} = P_o - P_x$$

② If $\left[kx + \frac{\mu \cdot x}{r_{ps}}\right] \leq 0.2$

where k: wobble coefficient μ: friction coefficient

فإنه يمكن في هذه الحالة حساب الفقد نتيجة wobble friction

و Curvature friction من معادلة واحدة كالتالي ∴

$$P_x = P_o\left[1 - \left(kx + \frac{\mu \cdot x}{r_{ps}}\right)\right]$$

∴ Lost will be $\Delta P_{wobble} + \Delta P_{curv.} = P_o - P_x$

• Value of Prestressing Force after immediate Losses •

$$P_{Jacking} \xrightarrow{\text{Immediate losses}} P_{Initial}$$

$\therefore$ Piniatial : $P_i = (1 - \%\ \text{imm. Losses})\, P_{Jacking}$

$$P_i = P_J - \Sigma\,\text{Imm. Losses} \qquad kg$$

$$P_i = (1 - \%\ \text{imm. Losses})\, P_J \qquad kg$$

$$\%\ \text{of imm. Losses} = \frac{\Sigma\ \text{Imm. Losses}}{P_J}$$

ii- Long Term Losses (Time-dependent Losses)

1- Shrinkage Losses

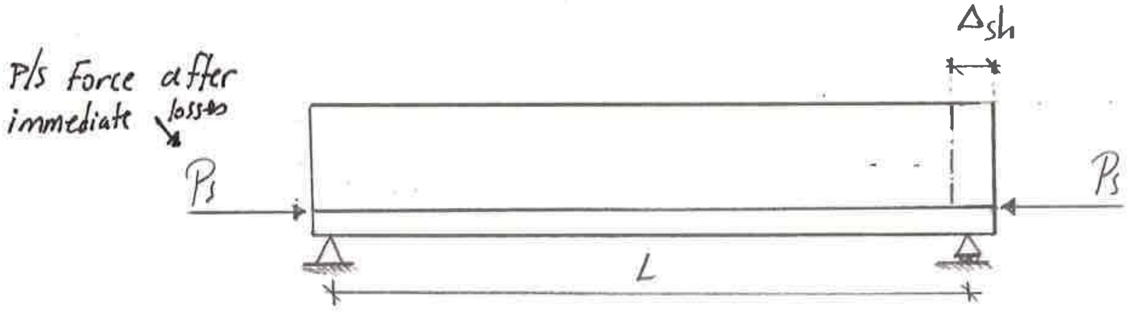

نتيجة الانكماش اللدن والانكماش الجفاف و الانكماش المرتبط بالتغيرات الحرارية تحدث

Δ_{sh} مصحوبة بانفعال الانكماش من الكمرة مما يؤدي لفقد من قوة سبق الإجهاد

$$\Delta_{sh} = \epsilon_{sh} \cdot L \qquad \therefore \epsilon_{sh} = \frac{\Delta_{sh}}{L}$$

where ϵ_{sh} : shrinkage strain for concrete

ويتم تحديده من جدول (٢-٩-٣) ص ٢-١٩ ECCS2001

إلا إذا لم تعط معلومات عن حالة الجو فإنه يتم تحديده من جدول (١٠-٥)

ص ١٠-٢٥

∴ If not given climate data

- $\varepsilon_{sh} = 300 \times 10^{-6}$ [Pre-tension]

  [3-5 days after casting]

- $\varepsilon_{sh} = 200 \times 10^{-6}$ [Post-tensioned beams]

  [7-14 days after casting]

وفي حالة التنفيذ المرحلي (Stage Construction)

يعتبر أن نصف انفعال الانكماش يحدث خلال أول شهر بعد الصب

و $\frac{3}{4}$ هذا الانفعال خلال أول 6 أشهر بعد الصب

∴ First month ⟶ $\frac{1}{2}\, \varepsilon_{sh}$

First 6 months ⟶ $\frac{3}{4}\, \varepsilon_{sh}$

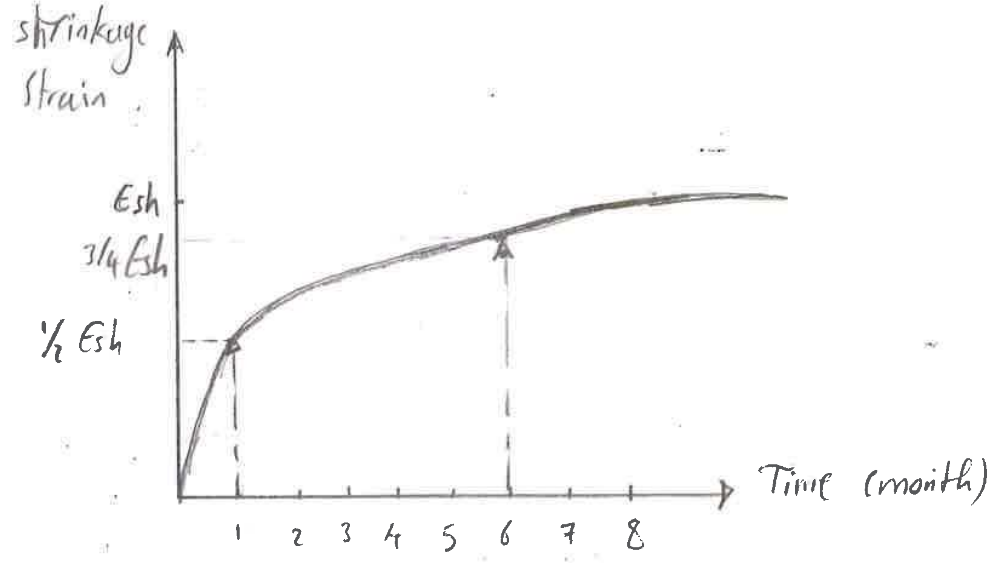

• stress lost by shrinkage •

$$\Delta f_{psh} = \epsilon_{sh} E_p \qquad kg/cm^2$$

• Force lost by shrinkage •

$$\Delta P_{sh} = \epsilon_{sh} E_p . A_p \qquad kg$$

2- Creep Losses

Creep: الزحف هو حدوث ترخيم للكمرة تحت تأثير الأحمال الثابتة مع الزمن لفترة طويلة وهو دالة في قيمة الأحمال الدائمة وخواص الخرسانة

*** Determine Creep Strain** ϵ_{cr}

* يتم تحديده من جدول (٢-٩-ب) ص٢٠

* إذا لم تعط معلومات عن حالة الجو الظروف البيئية يتم تحديده من جدول (١٠-٦) ص٢٦

* حيث يعطي الجدول ϵ_{cr}

* If $f_c > \frac{1}{3} f_{cu}$ f_c: working stress

$\therefore$ you must multiply table values by "α"

$$\therefore \epsilon_{cr}^{*} = \epsilon_{cr} * \alpha$$

α : factor depends on concrete stress level P.(10-26)

• In stage Construction:-

First month ⟶ $\frac{1}{2}\,\varepsilon_{cr}$

First 6 month ⟶ $3/4\,\varepsilon_{cr}$

• Stress Lost by Creep.

$$\Delta f_{P_{cr}} = \frac{\varepsilon_{cr}}{\varepsilon_{el.}} * \frac{E_P}{E_C} * f_{cs} = \phi \frac{E_P}{E_C} \cdot f_{cs} \quad kg/cm^2$$

where $\phi = \frac{\varepsilon_{cr}}{\varepsilon_{el.}}$. ϕ: creep coefficient

- ε_{cr} : creep strain • $\varepsilon_{el.}$: elastic strain
- ϕ : creep coefficient $\simeq 2.00$ Pre-tensioned

  $\simeq 1.60$ Post-tensioned
- E_P : $1.96 * 10^5$ Mpa $= 1.96 * 10^6$ kg/cm^2
- $E_C = 14000\sqrt{f_{cu}}$ kg/cm^2
- $E_C = 4427\sqrt{f_{cu}}$ N/mm^2

f_{cs} : Net concrete stress at tendon Level

$$f_{cs} = f_{cs}^{*} - f_{csd}^{*}$$

f_{cs}^{*} : Concrete stress at tendon level at time of tensioning.

f_{csd}^{*} : Concrete stress at tendon level due to dead Loads.

$$f_{cs} = -\frac{P_i}{A_c} - \frac{P_i \cdot e^2}{I_g} + \frac{M_{D.L.} \cdot e}{I_g}$$

• **Prestressing Force Lost by creep.**

$$\Delta P_{cr} = \epsilon_{cr} \cdot E_p \cdot A_p \quad kg \qquad \text{in case of using } \epsilon_{cr}$$

or

$$\Delta P_{cr} = \Delta f_{Pcr} \cdot A_p \quad kg \qquad \text{in case of using } \phi$$

3- Steel Relaxation Losses.

1- We may neglect steel Relaxation losses if we pre-Load steel for a short period of time to a stress > Max Tensile stress of prestressing.

2- Stress Lost due to steel Relaxation.

$$\Delta f_{P_R} = \frac{f_{P_i} (\log t)}{K_1} \cdot \left[\frac{f_{P_i}}{f_{Py}} - 0.55 \right] \quad Kg/cm^2$$

Δf_{P_R} : Steel relaxation stress lost.

t : time from jacking start, $t \ngtr 1000$ hr

f_{P_i} : steel stress after immediate losses & before Long term Losses

f_{Py} : yield stress of steel.

K_1 : 10 Normal relaxation stress-relieved steel

45 Low relaxation stress-relieved steel.

- **Force Lost due to steel Relaxation :-**

$$\Delta P_R = \Delta f_{P_R} \cdot A_p$$

kg

- **Final Prestressing Force after Long Term Losses.**

$$P_f = P_i - \Sigma \text{ Long term Losses}$$

$$P_f = P_i - (\Delta P_{sh} + \Delta P_{cr} + \Delta P_R)$$

$$P_f = (1 - \% \text{ Long term Losses}) P_i$$

$$\% \text{ Long term Losses} = \frac{\Sigma \text{ Long term loss}}{P_i}$$

• Final Prestressing Force. P_f

$$P_f = P_J - \Sigma \text{Total losses}$$

$$\Sigma \text{Total Losses} = \underbrace{(\Delta P_e + \Delta P_{Pull\text{-}in} + \Delta P_{Wob.} + \Delta P_{cur.})}_{\text{Immediate}}$$

$$+ \underbrace{(\Delta P_{sh} + \Delta P_{cr} + \Delta P_{R})}_{\text{Long Term}}$$

$$\% \text{ Total losses} = \frac{\Sigma \text{Total losses}}{P_J}$$

$$P_f = (1 - \% \text{ Total losses}) P_J$$

(% Total losses = 10% – 20%)

بسم الله الرحمن الرحيم

Prestressed Concrete

Design of End Anchorage*

(1) Single Anchor End Block

i- General Zone Design

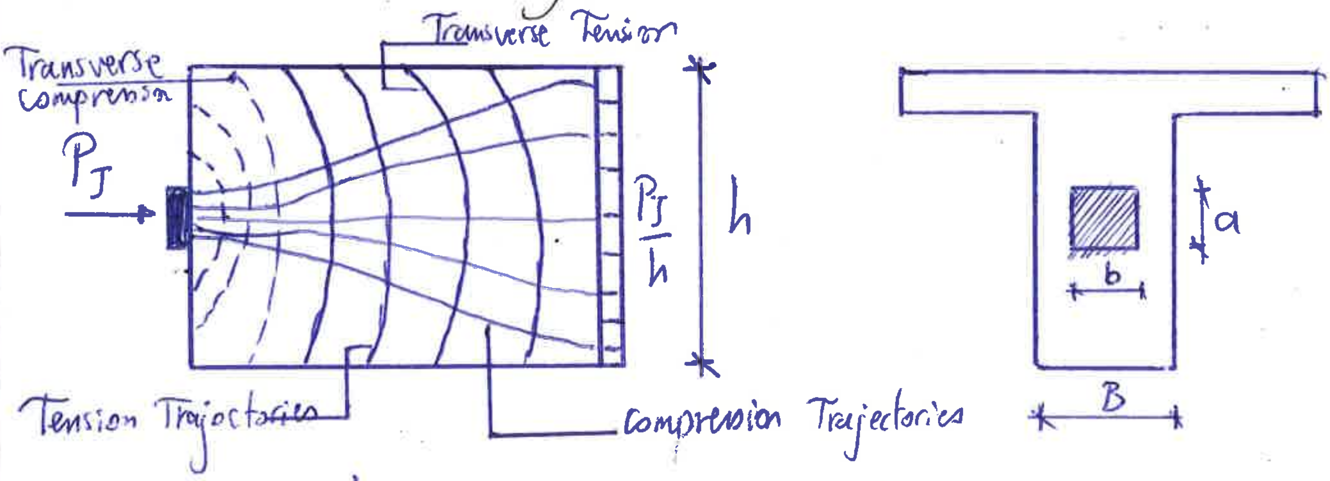

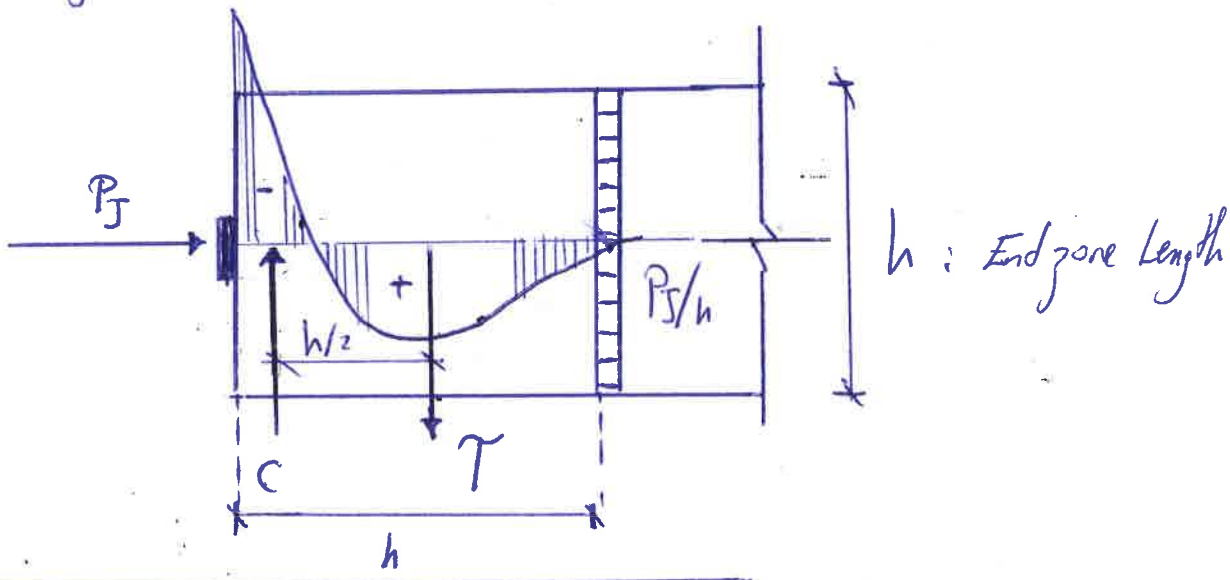

* Ref : Dr. Adel EL-ATTar Lecture Notes

Free-body Diagram

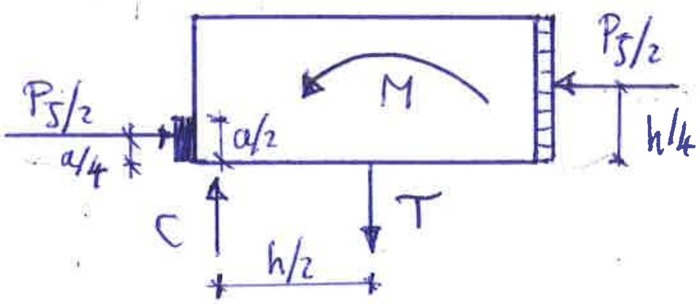

$$M = P_J/2 * h/4 - P_J/2 * a/4 = P_J/8h\,(1 - a/h)$$

$$C = T = \frac{M}{(h/2)} = \frac{P_J}{4}(1 - a/h)$$

if $a = 40$ cm , $h = 80$ cm $\therefore a/h = 0.50$

$$T = \frac{P_J}{4}(1 - 0.50) = \frac{P_J}{8} = 0.125\,P_J \text{ ton}$$

Reinforcement Steel.

To minimize cracks in end zone

take $f_s = 0.87 f_y$ $\quad \epsilon_s \ngtr 0.001$

$\therefore f_s$ = smaller of
- → $0.001 \times 2.1 \times 10^6 = 2000\ kg/cm^2$
- → $0.87 f_y$ ~ given

get $A_{s\,General} = \dfrac{T}{2 f_s}$

↳ 2 branches stirrup

Distribute General zone Reinforcement over a distance "h"

Final Reinforcement.

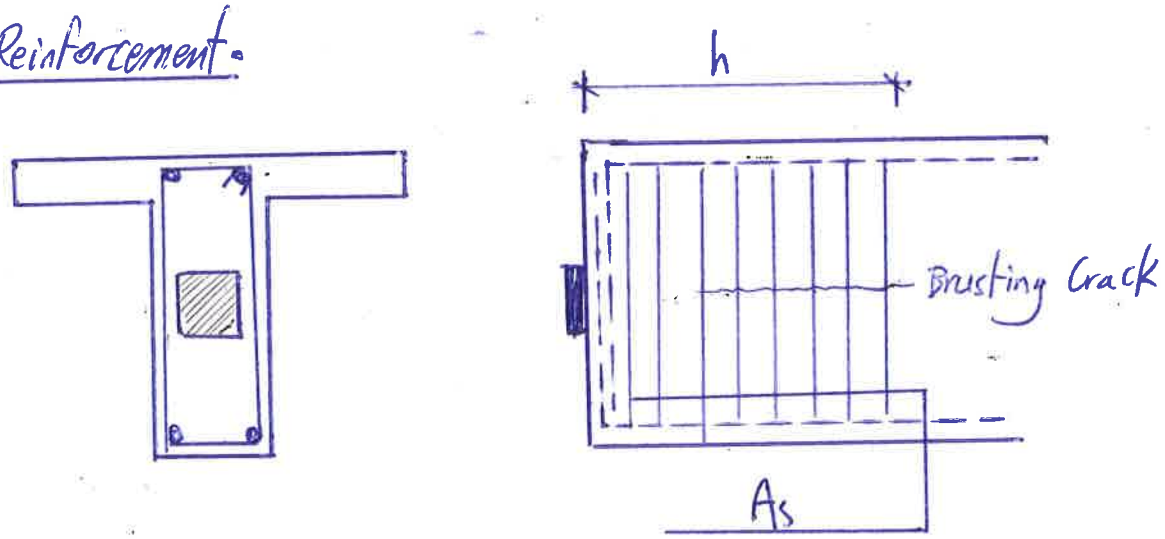

(ii) Local zone Design

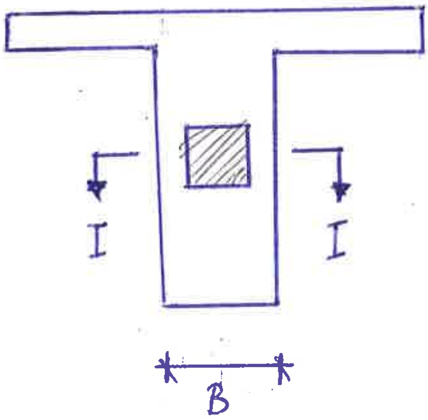

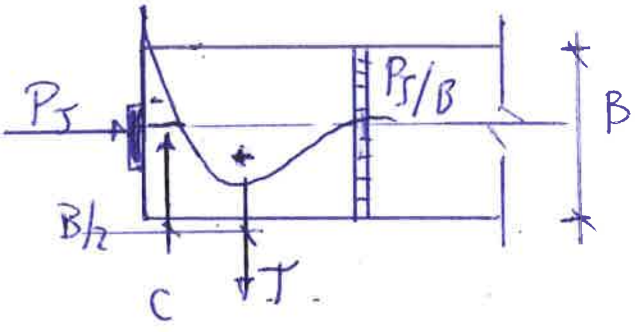

sec I-I

$$M = \frac{P_J}{8B}\left(1 - \frac{a}{B}\right)$$ derived same as General zone

$$T = \frac{P_J}{4}\left(1 - \frac{a}{B}\right) \quad \& \quad A_s = \frac{T}{2 f_s}$$ f_s: same as G. zone

* Distribute local zone reinforcement over a distance ($B \rightarrow 1.5\,B$) B: Local zone Dimension.

* Usually spiral Rft is used (manufacturer Cataloge.)

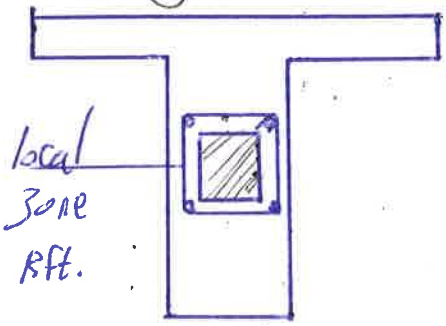

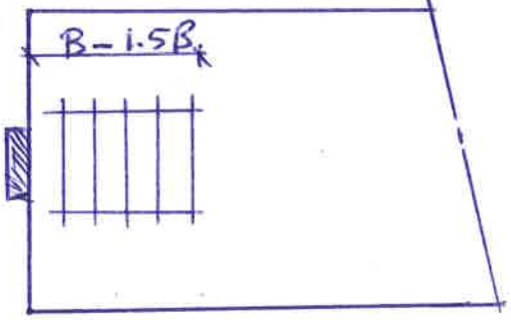

② Eccentric Single-Anchor End Block

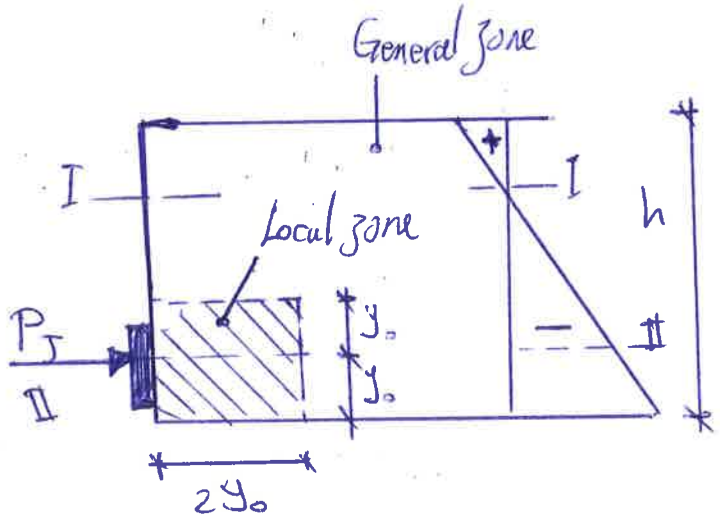

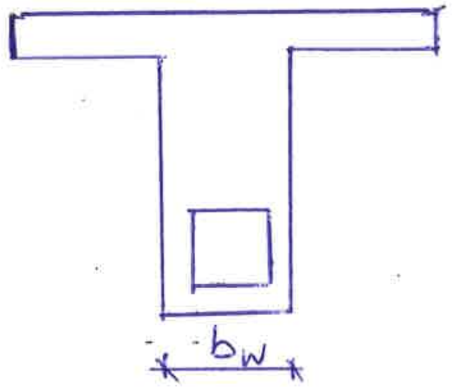

- Local zone dimension $= 2y_o$,

  y_o : distance between cable ℄ and the nearest concrete surface

$$y_o \ngtr b_w$$

General zone

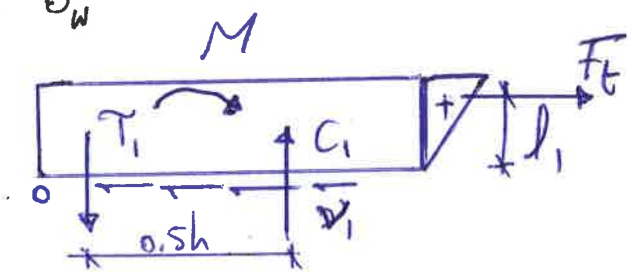

sec (1-1)

T_1 : spalling force

$$T_1 = \frac{F_t \cdot l_1}{0.5h} = \frac{M_{spall}}{0.5h}$$

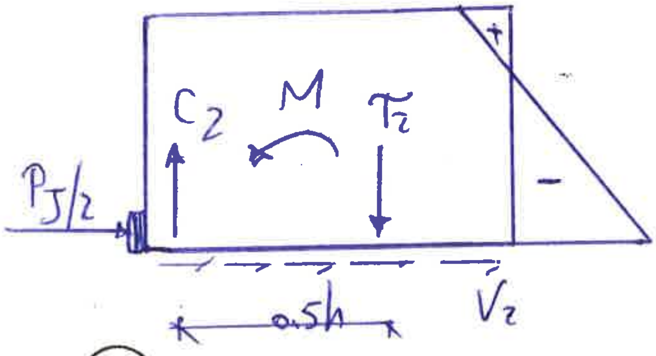

$$T_2 = \frac{M_{brust}}{0.5h}$$

③ Multiple - Anchor End Block

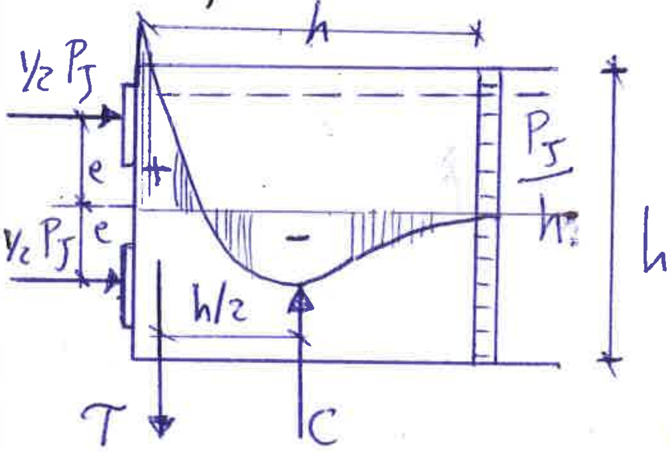

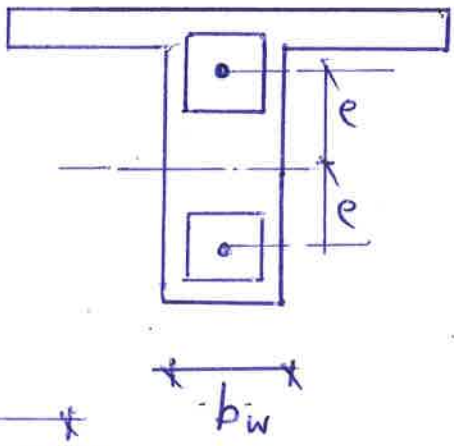

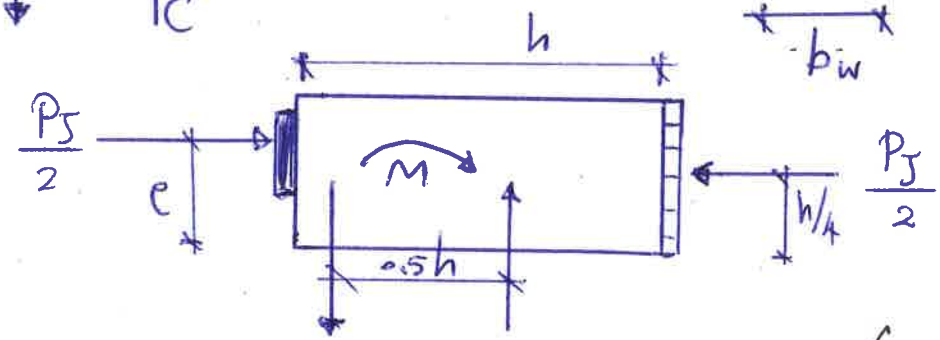

free-body Diagram

Note : if $4e < h$ $\therefore$ C & T are reversed.

$$C = T = \frac{P_J}{2}\left(\frac{h}{4} - e\right) * \frac{1}{0.5h} = P_J\left(\frac{1}{4} - e/h\right)$$

$$C = T = 0.25\, P_J\, (1 - 4e/h) \rightsquigarrow \text{Spalling Force}$$

$$A_{st.} = \frac{T}{2 f_s} \qquad f_s : \text{same as single anchor}$$

• Final Reinforcement •

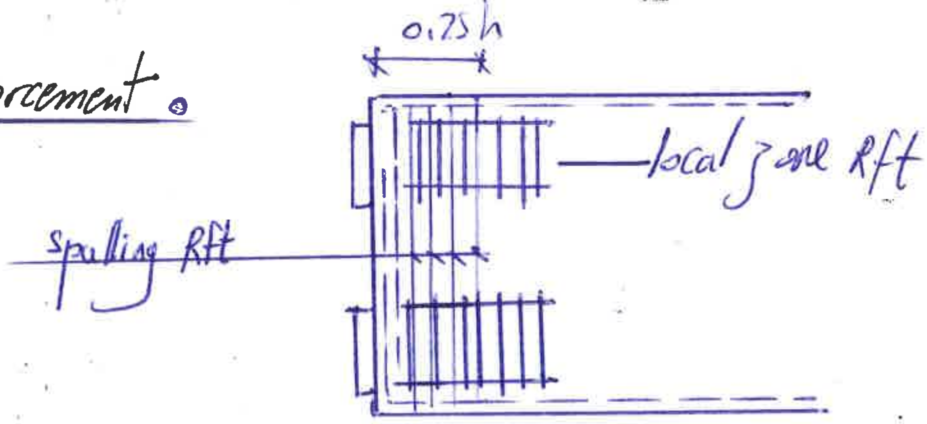

4 Bearing Stresses

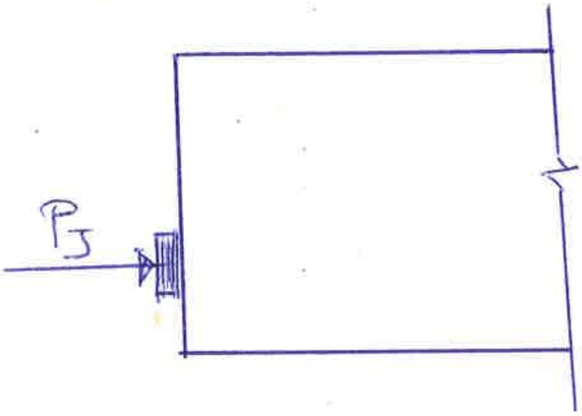

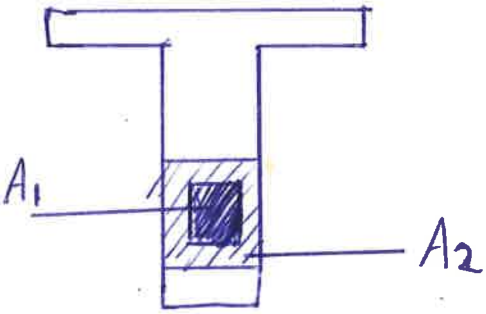

$\frac{P_J}{A_1}$: Bearing stresses

$$P_J / A_1 \ngtr \sqrt{A_2/A_1}\, f_{ci}$$

$$\ngtr 2 f_{ci}$$
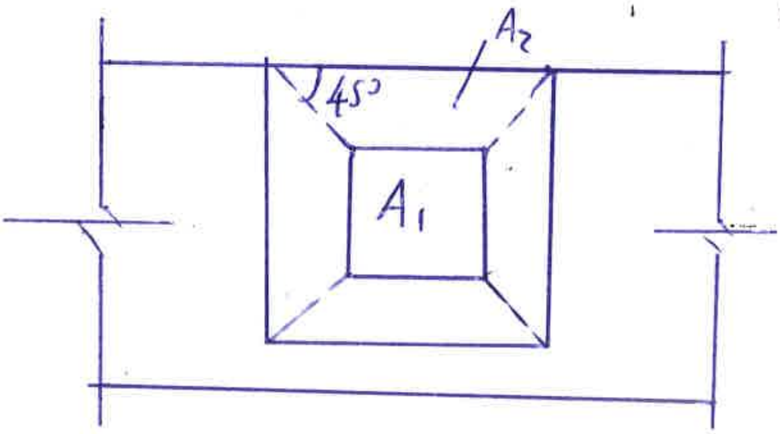
(usually = 200 kg/cm²)